Lab 6: Clusters and graph & chart

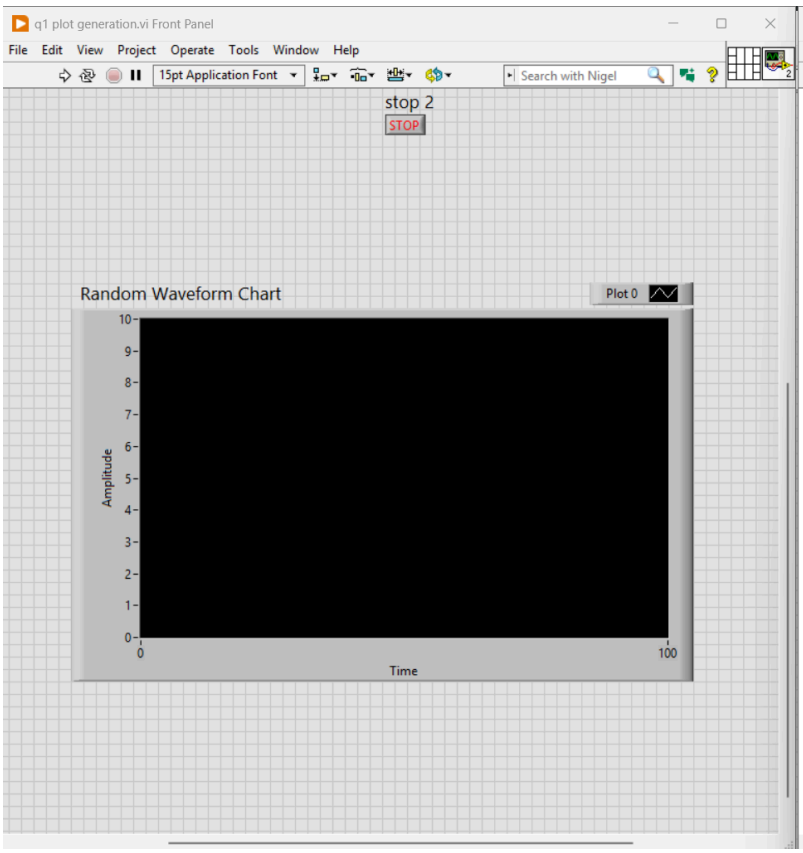

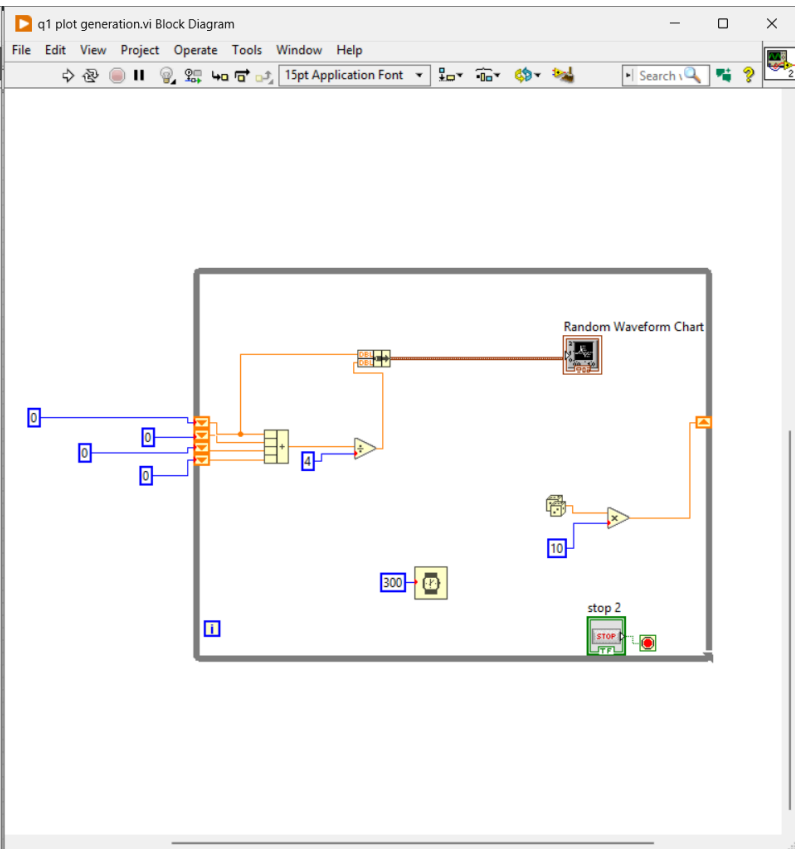

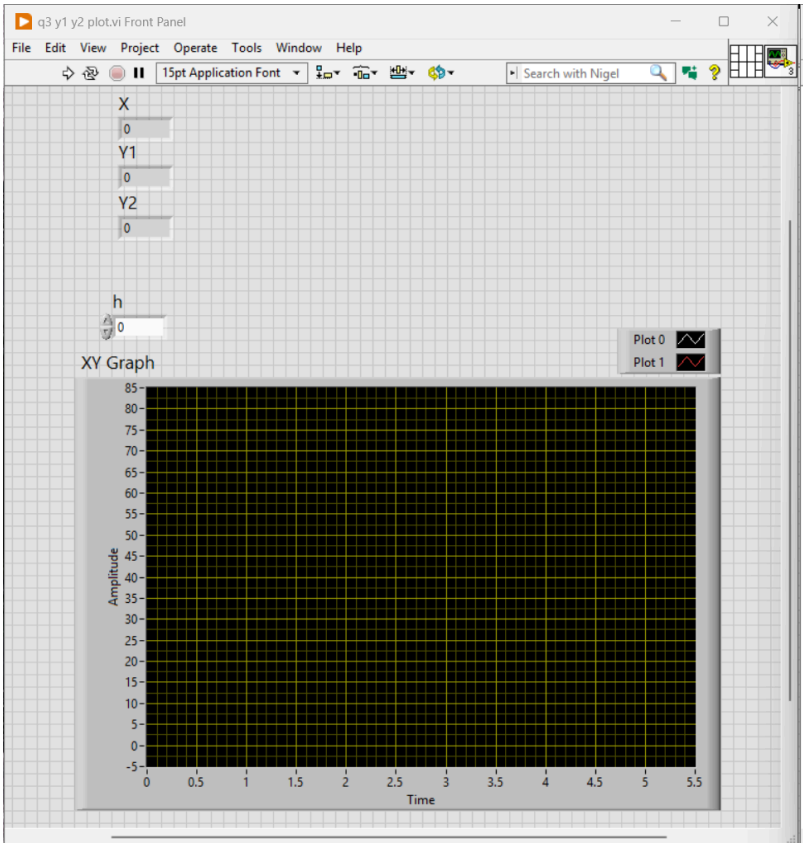

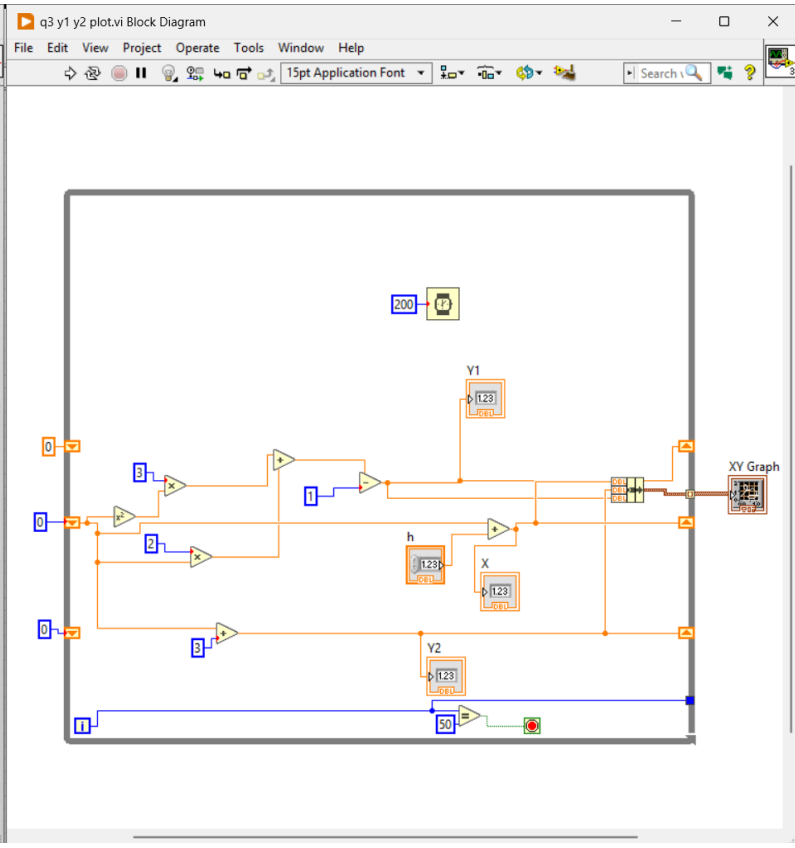

Lab 6: Clusters and graph & chart